Palco Recessed / Surface

Design Artec Studio **iGuzzini**

Last information update: October 2024

Product configuration: QX15
QX15: Palco single recess Ø37 - spot - remote driver

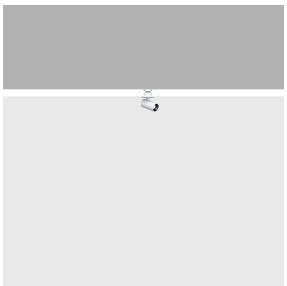

Product code
QX15: Palco single recess Ø37 - spot - remote driver

Technical description
Miniaturised adjustable spotlight for recessed installation. Spotlight body with a die-cast aluminium dissipation system - cast zamak rotation unit - machined aluminium recess base - steel wire fixing springs. The swivel joints allow the spotlight to be rotated by 360° and tilted by 90°. The set back position of the optic unit guarantees a high level of visual comfort with a thermoplastic high definition lens. Ballast not included, available with separate code.

Installation
Recessed base with surface stop plate - steel wire springs for false ceilings from 1 to 25 mm thick - preparation hole Ø36 mm.

Colour	Weight (Kg)
White (01) | Black (04)	0.12

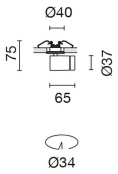

Mounting
wall recessed|ceiling recessed

Wiring
Output cables for connecting to power supply line.

Notes
Technical and anti-glare accessories available.

Complies with EN60598-1 and pertinent regulations

IP20

Technical data

lm system:	504	CRI (minimum):	90
W system:	8.1	Colour temperature [K]:	4000
lm source:	840	MacAdam Step:	2
W source:	8.1	Life Time LED 1:	> 50,000h - L90 - B10 (Ta 25°C)
Luminous efficiency (lm/W, real value):	62.2	Lamp code:	LED
lm in emergency mode:	-	Number of lamps for optical assembly:	1
Total light flux at or above an angle of 90° [Lm]:	0	ZVEI Code:	LED
Light Output Ratio (L.O.R.) [%]:	60	Number of optical assemblies:	1
Beam angle [°]:	16°	LED current [mA]:	650

Polar

Imax=4448 cd

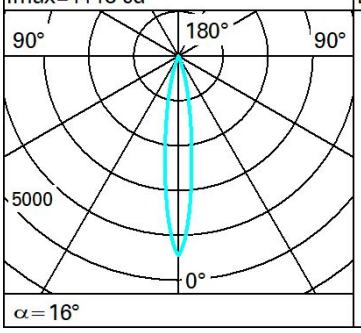

Lux

h	d	Em	Emax
2	0.6	830	1112
4	1.1	207	278
6	1.7	92	124
8	2.2	52	69