Linealuce

Design Jean-Michel Wilmotte | **iGuzzini**

Last information update: November 2024

Product configuration: EX36
EX36: 47 recessed Remote – Warm White – 48V dc DALI – L=1204mm – Wall Grazing Spot optic

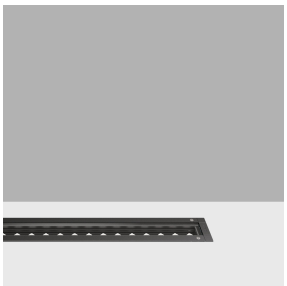

Product code
EX36: 47 recessed Remote – Warm White – 48V dc DALI – L=1204mm – Wall Grazing Spot optic

Technical description
Direct light luminaire, designed to use monochrome LED lamps, DALI 48Vdc dimmable with searching and addressing function and transparent glass cover. Ground-, wall- and ceiling-recessed. Option of installation in continuous lines of up to a max length of 10.5m only for ground-recessed installation. Made up of a body, end caps, an outer casing and caps to be ordered separately. Extruded aluminium body, with die-cast aluminium end caps complete with silicone seals. The painting process includes a multi-step, pre-treatment process, in which the main phases are degreasing, fluorozirconation (a protective surface film) and sealing (with a nano-structured silane layer). The following painting stage consists of a primer and a liquid acrylic paint, cured at 150°C, with a high level of weather and UV ray resistance. Lower PPS (polyphenylene sulfide) box for control gear. The top of the optical assembly is closed by an 8mm thick, transparent extra clear glass screen with serigraphy and fixed with silicone. Complete with monochrome multi-LED plate and a 48V dc DALI electronic driver (ballast to be ordered separately). Fitted with optics with a plastic (methacrylate) lens. At the bottom of the optical assembly there is a PPS (polyphenylene sulfide) box fitted with two nickel-plated brass cable glands PG11 for pass-through wiring, suitable for cables Ø8.5÷12.5 mm. To fix the optical assembly to the outer casing or false ceiling the product has a quick coupling system using an Allen key. All external screws used are made of A2 stainless steel.

Installation
Ground- and wall-recessed using the outer casing, to be ordered separately, together with the end caps for the optical assembly and outer casing caps. Option of installation in continuous lines of up to a max length of 10.5m only for ground-recessed installation: in this case, too, the joints for the outer casings must be ordered separately. For ground installation a drainage channel must be created or gravel inserted for drainage under the outer casing before installation, to guarantee the degree of protection stated. For ceiling-mounting with plasterboard panels (1-30 mm thick), make the preparation openings as indicated in the instructions sheet and use the steel cables with reinforcement plates in the accessory kit.

Colour	**Weight (Kg)**
White (01) | Black (04) | Grey (15) | Rust Brown (F5)	5.1

Mounting
wall recessed|Floor recessed|ceiling recessed

Wiring
Complete with DALI 44÷52Vdc control card. The product is supplied with a nickel-plated brass PG11 double cable gland with H07RN-F 4x1, 5mm² rubber outlet cables for pass-through wiring with connectors (illegible part). Available for electrical connection and DALI control: IP68 4-pin female connector, IP68 4-pin male connector + closing cap, and IP68 4-pin male + female connectors.

Notes
Product complete with LED lamp.

Complies with EN60598-1 and pertinent regulations

IK10 | 2000 kg | IP67

Technical data

lm system:	3264	MacAdam Step:	3
W system:	39.2	Life Time LED 1:	100,000h - L80 - B10 (Ta 25°C)
lm source:	4800	Life Time LED 2:	100,000h - L80 - B10 (Ta 40°C)
W source:	34	Voltage [Vin]:	48
Luminous efficiency (lm/W, real value):	83.3	Lamp code:	LED
lm in emergency mode:	-	Number of lamps for optical assembly:	1
Total light flux at or above an angle of 90° [Lm]:	3264	ZVEI Code:	LED
Light Output Ratio (L.O.R.) [%]:	68	Number of optical assemblies:	1
CRI (minimum):	80	Intervallo temperatura ambiente:	from -30°C to 50°C.
Colour temperature [K]:	3000	Control:	DALI-2
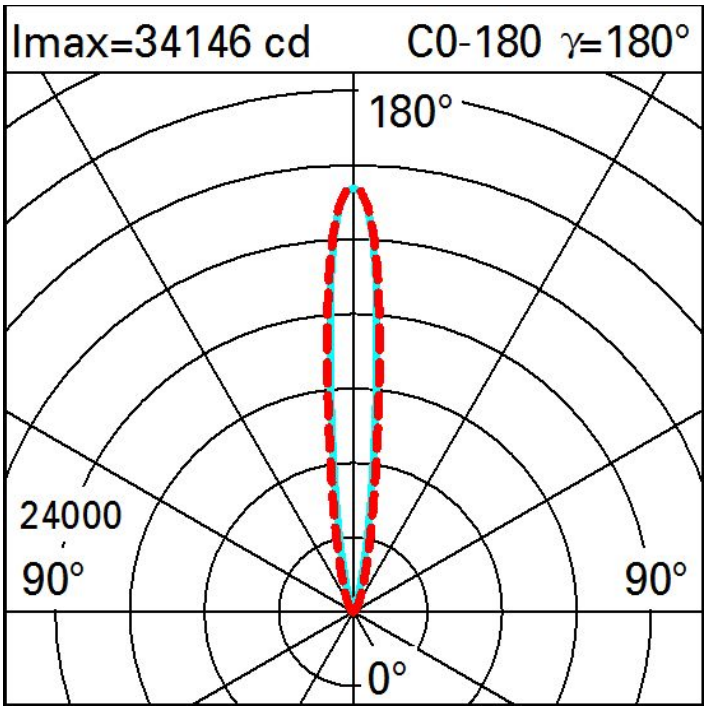
Polar